ThermoGenius™ Water M – Service Instruction Manual

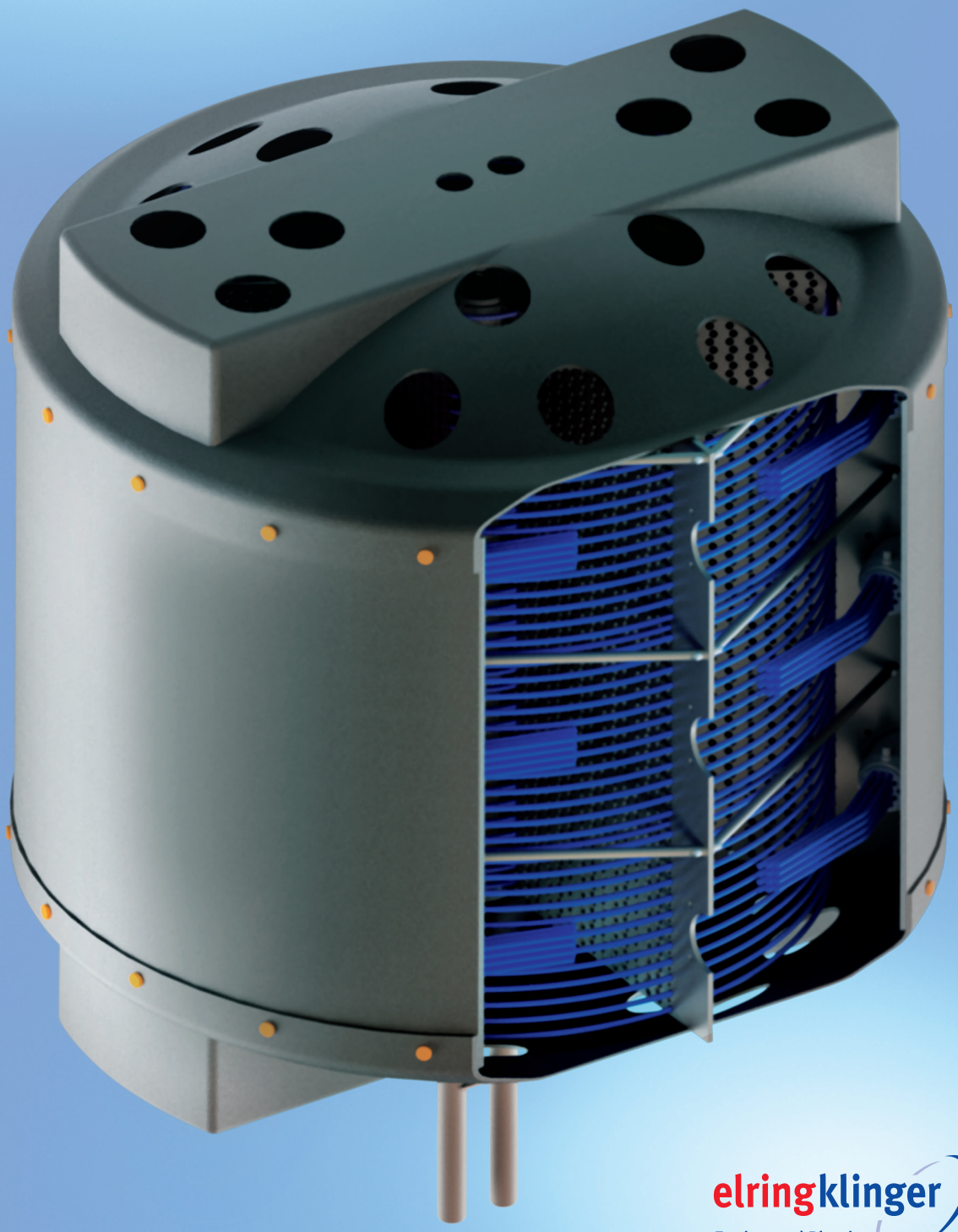

elringklinger
Engineered Plastics

1 Contents

1.1 List of figures

2 Safety

2.1 Observing instructions

	**Follow the operating manual** For the proper installation of the heat exchanger in its intended location, it is essential that the Service Instruction Manual is read, understood, and followed.

2.2 General safety concept

The ThermoGenius™ *heat exchanger is designed and manufactured according to the latest technical standards and does not pose any danger to humans or the environment during normal use.*

However, improper transportation, installation, or maintenance may cause damage to the heat exchanger, which could endanger people and/or the environment.

2.3 Intended use

The ThermoGenius™ *heat exchanger is designed for use in lakes, watercourses, and rivers, and forms part of a cooling/heating circuit that can be used to transfer a heat flow. It can also be operated safely in salt water. This heat exchanger is temperature resistant between −10°C and +40°C. However, please note that to prevent the heat exchanger from freezing, it should not be operated with an inlet temperature lower than −3°C.*

2.4 Target group

This Service Handbook is designed for personnel who are familiar with setting up, installing, commissioning, and operating heat pump circuits that include an integrated heat exchanger.

To understand the individual work steps, detailed specialist knowledge is required.

2.5 Qualified personnel only

The ThermoGenius™ *heat exchanger must only be installed, removed, and maintained by qualified and trained personnel.*

- *Required qualification for working under water: diving certificate conforming to at least* ***ISO 24801-2/DIN EN 14153-2 (two people) with fitness certificate***
- *Required qualification for welding work: valid welder's certificate conforming to local regulation (e.g.:* ***DVS 2281 with examination conforming to DVS 2207-1 with electrofusion welded moulded parts or heating element socket welding****)*

2.6 General warning signs

	**Danger of slipping** The ground may become slippery due to leaking cooling/heating medium. Wear slip-resistant footwear!
	**General warning** Leaking cooling/heating medium may cause injuries to the skin, eyes, or airways. Please observe the manufacturer's safety instructions for the product being used! Personal protective equipment (PPE) must be worn!
	**Warning about flammable substances** Leaking cooling/heating medium can cause a fire hazard. Please observe the manufacturer's safety instructions for the product being used!
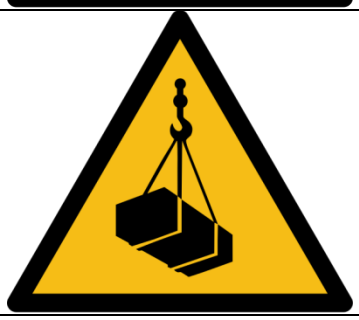	**Warning about suspended loads** To transport the heat exchanger during installation, maintenance, or removal, stabilise the heat exchanger using the lugs provided (see Chapter 5.2). Do not stand underneath the heat exchanger! Wear a hard hat when working with suspended loads!

3 Performance specification

ThermoGenius™ M1–M3

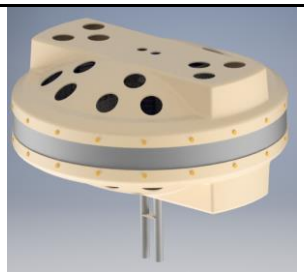

Figure 1: ThermoGenius™ heat exchanger M1

Figure 2: ThermoGenius™ heat exchanger M2

Figure 3: ThermoGenius™ heat exchanger M3

Houseboats and boathouses as well as holiday homes and apartments that are located close to water generally use conventional energy sources such as gas, water, or oil. This gives rise to high energy costs and unnecessary greenhouse gas emissions.
Even "lake loops", which are supposedly the green alternative, require a large space that may cause animals to become trapped and, depending on the applicable water conservation legislation, may not even be available.

The **ThermoGenius™** *heat exchanger is a geothermal heat exchanger that takes advantage of heat energy from natural and freely available resources. Compared with lake loops, the compact design of the heat exchanger means that only a tiny fraction of the space is needed. In addition, the heat exchanger's outer shell can protect it from external influences at the same time.*

The **ThermoGenius™** *can be used for both heating and cooling applications.*

In deeper water, the temperature is almost constant regardless of the time of day or season.
At these depths in particular, the **ThermoGenius™** *can either extract the heat from the water for heating applications or transfer heat into the water for cooling applications.*

The **ThermoGenius™** *is available in performance categories M1, M2, and M3, and more than one module can be linked together to increase the transferred heat output.*

3.1 Technical data

	ThermoGenius™ M1	**ThermoGenius™ M2**	**ThermoGenius™ M3**
Dimensions *in mm*	Ø 1,220 x 605	Ø 1,220 x 900	Ø 1,220 x 1,195
Length of connecting pipework *in mm*	360		
Material	PE-HD		
Operating temperature range *in °C*	−10 to +40		
Max. operating pressure at −10°C *in bar*	3.7		
Max. operating pressure at 0°C *in bar*	4.4		
Max. operating pressure at +20°C *in bar*	4.4		
Max. operating pressure at +40°C *in bar*	3.8		
Net weight *in kg*	45	76	107
Filling volume *in L*	25	50	74
Exchange area *in m^2*	13.6	27.1	40.7
Max. flow rate *in m^3/h*	2	3.4	4.7

4 Parts and function

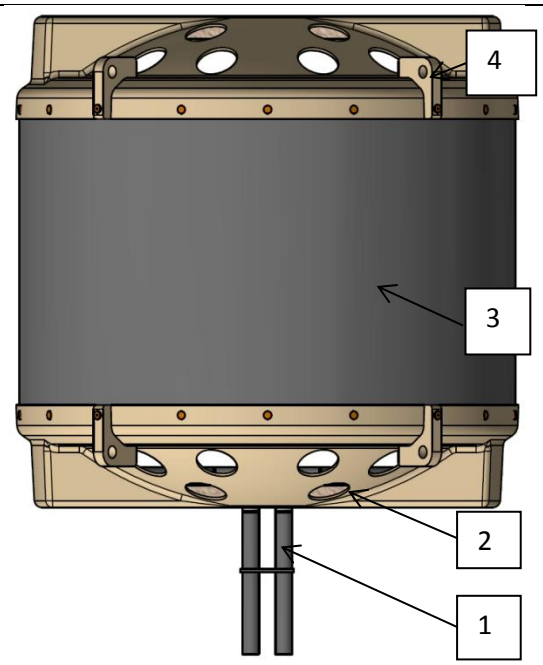

Figure 4: Side view of the ThermoGenius™ heat exchanger

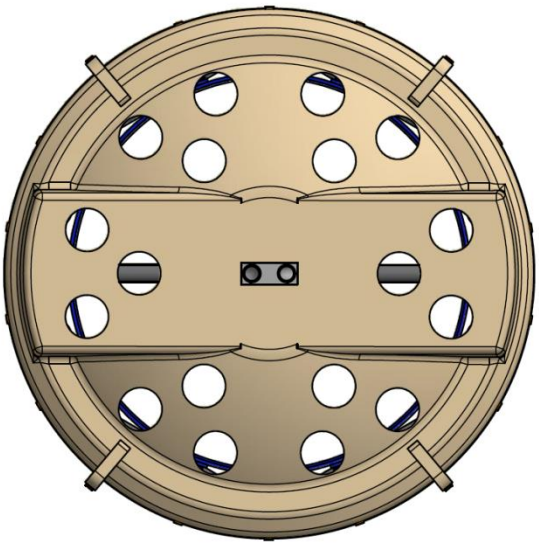

Figure 5: Top/bottom view of the ThermoGenius™ heat exchanger

No.	Description	Function
1	Inlet/outlet for heat transfer media	Connects to the pipes carrying the media
2	Cover	Protects the heat exchanger
3	Casing	Protects the heat exchanger
4	Lugs on the cover	Lugs used for transportation and for securing

4.1 Package contents

No.	Description	Quantity
1	**ThermoGenius™** model M1/M2/M3	1
2	**ThermoGenius™** Service Handbook	1

5 Tasks

5.1 Unpacking the heat exchanger

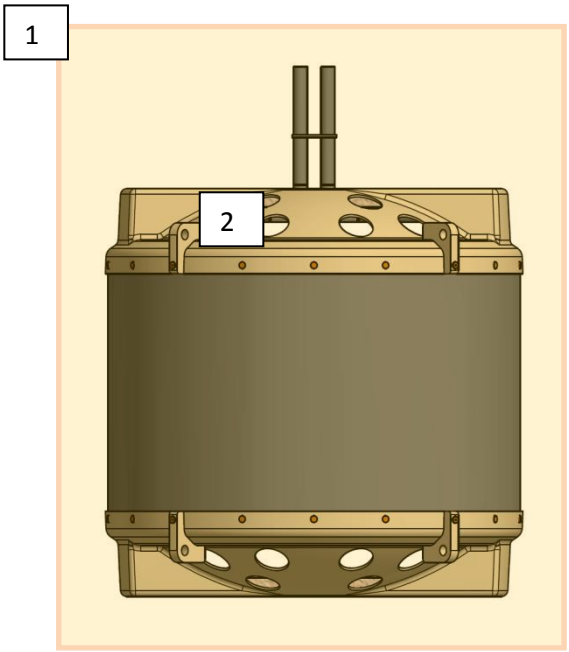

- The ThermoGenius™ heat exchanger is delivered in a vertical position in its shipping box.
- The connecting pipework points ***upwards***.
- [1] Open the lid (see description top side), and cut the sides open if necessary.
- [2] Attach transportation cable or crane hooks to the lugs on the casing.
- Remove the heat exchanger from the box.

Note: Take care not to damage the inlet/outlet pipes!

5.2 Attaching the cooling/heating media inlet and outlet pipes

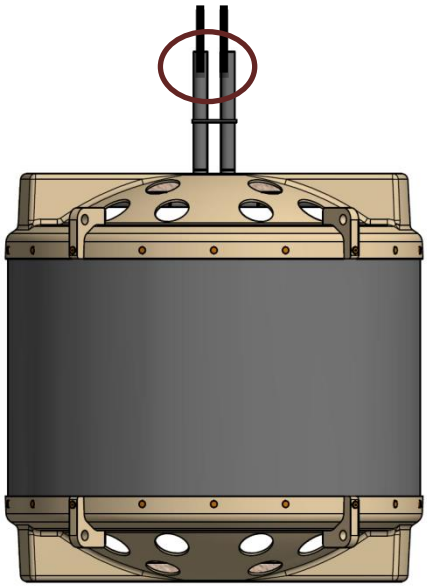

- The heat exchanger must be in a vertical position and secured to prevent any movement.
- The connecting pipework points ***upwards***.
- Weld the pipework to the inlet and outlet on the heat exchanger.

Note: Welding must not be carried out in water! Welding or connection is not possible in water!

5.2.1 Options for connecting the pipework

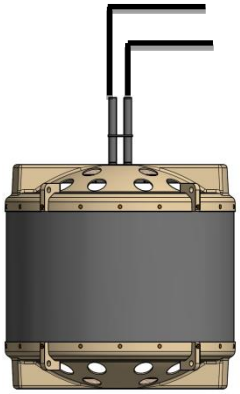

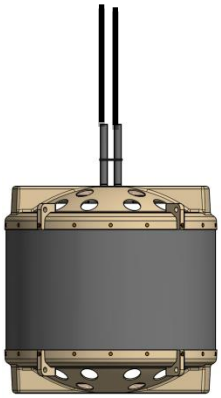

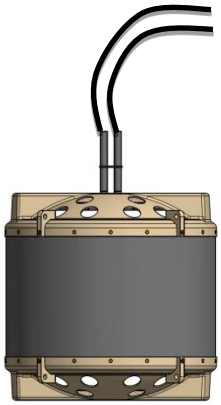

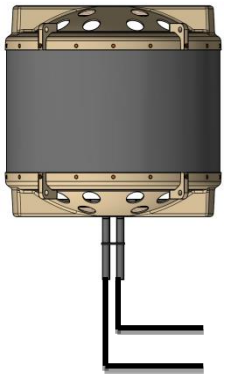

Connection with 90° angles

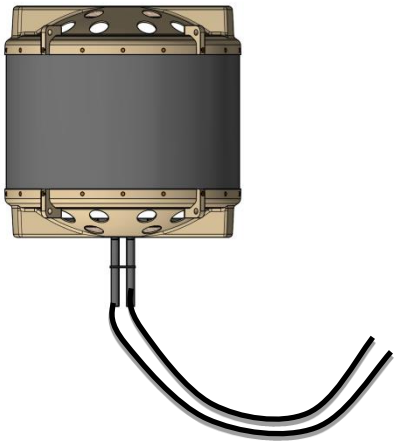

Connection with flexible hoses

5.3 Transporting the heat exchanger

5.3.1 Transporting on land

a) Using a transportation cable 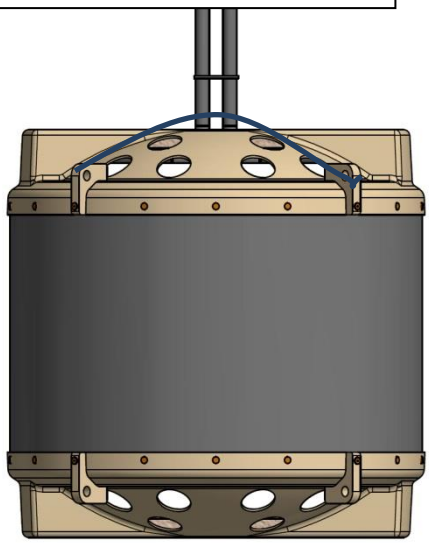	• The heat exchanger must be in a level position. • The connecting pipework points ***upwards***. • Attach the transportation rod to the lugs. • Transport the heat exchanger using the transportation cable. • Transportation to be carried out by **at least two people**
b.) Via suspension on a crane 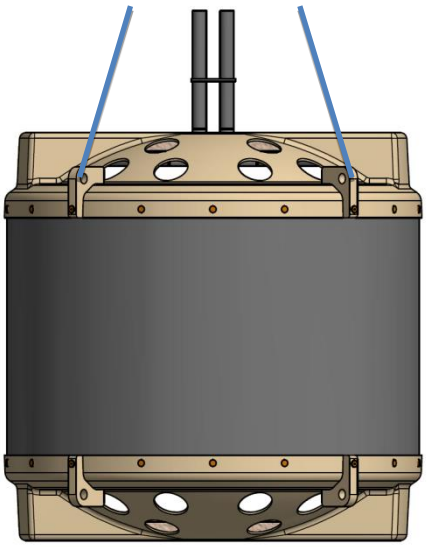	• The heat exchanger must be in a level position. • The connecting pipework points ***upwards***. • Attach the heat exchanger to the crane's suspension by means of the lugs on the casing. • During transportation, **nobody should stand beneath the heat exchanger**! • During transportation, one person must guide the heat exchanger from the side!

5.3.2 Installation into water

Note: *The user is responsible for filling the heat exchanger with the* heat transfer media.

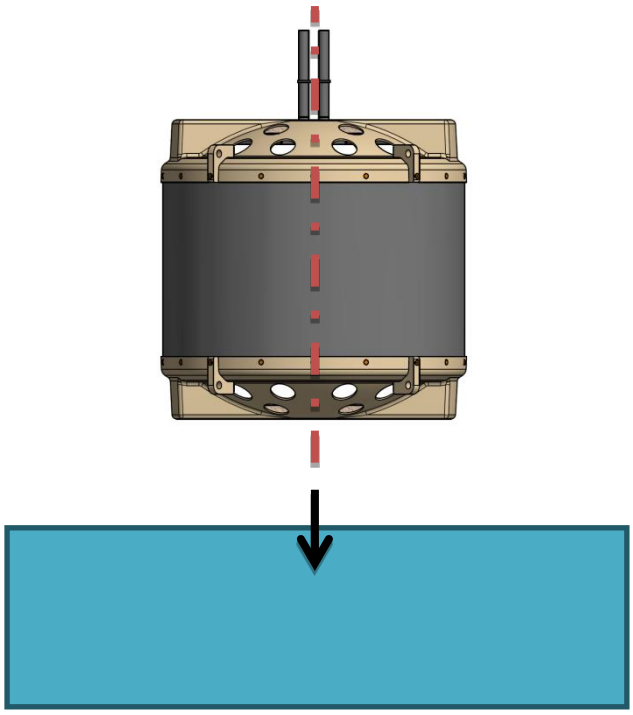	• Position the heat exchanger vertically in the water. • The connecting pipework points ***upwards***.
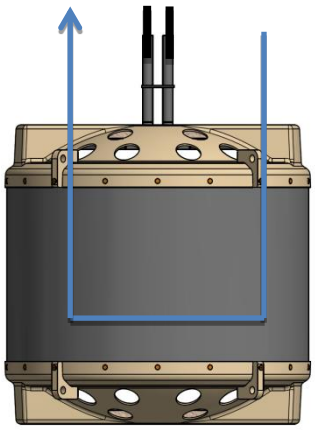	• Next, fill the heat exchanger with the heat transfer media.

5.3.3 Alignment according to installation method

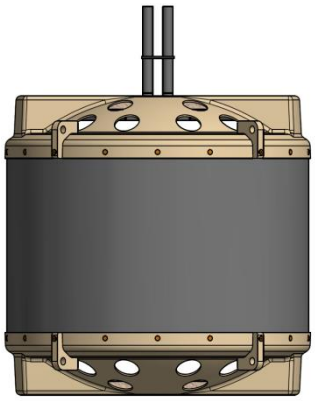

Figure 6: Installation with connecting pipework pointing upwards

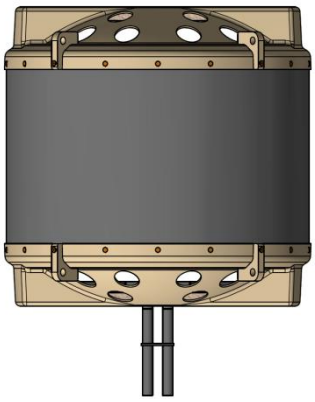

Figure 7: Installation with connecting pipework pointing downwards

5.3.4 Transporting in water

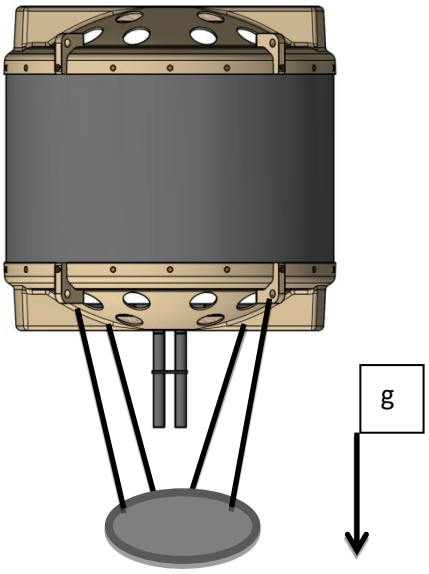

- Installation ***can*** be carried out without underwater work.
- If installation/removal work needs to be carried out **<u>under</u>** water, **this requires two people each with a valid diving licence**!
- [1] Transport the heat exchanger to its intended location (e.g. by crane, boat, or using divers).
- [2] Secure the weight to the lugs on the lower cover (depending on installation method).
- Lower the weight gradually (via cable or using a diver) and **prevent it from dropping too rapidly**!
- Allow the heat exchanger to sink to the specified depth.
- Heat exchanger must be fixed to the bottom if necessary.

<u>Note:</u> Heat exchanger must be guided while being lowered!

5.4 Securing the heat exchanger

5.4.1 Using weights

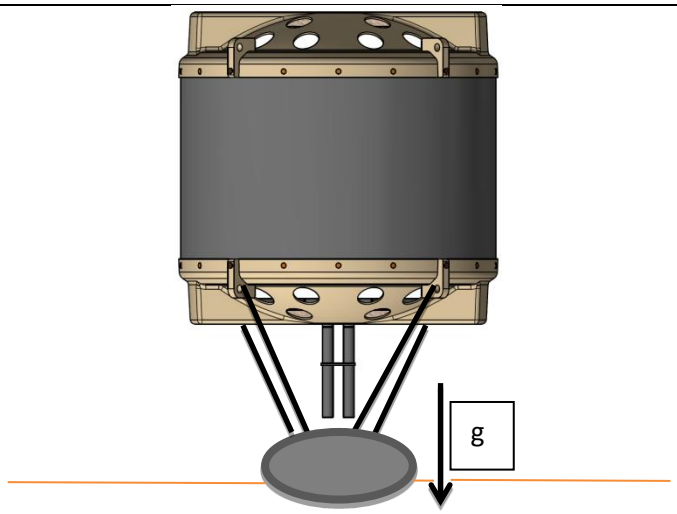

- Attach the weight to the lugs on the cover.
- Lower the heat exchanger to its specified depth.
- Locate the weight on the bottom of the body of water.

Recommended minimum weights:

- M1 = 35 kg
- M2 = 75 kg
- M3 = 100 kg

5.4.2 Attaching the heat exchanger to supports

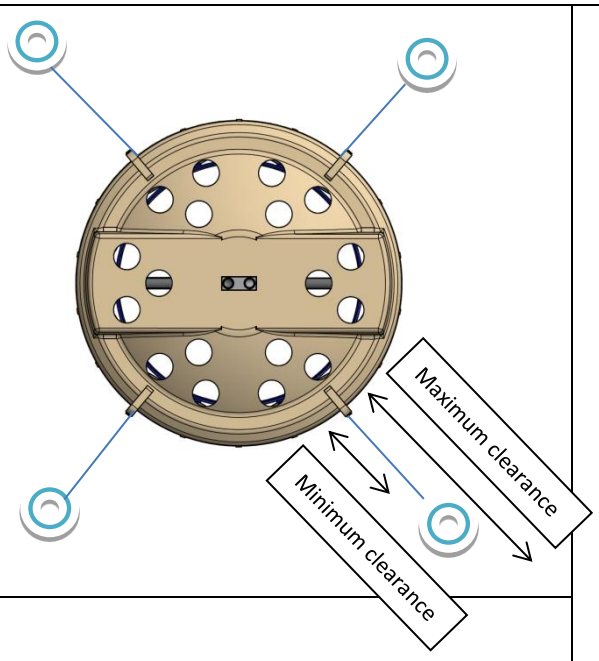

- Lower the heat exchanger to its specified depth.
- Next, connect the heat exchanger to the supports using the lugs on the casing.

Recommended clearance from the supports:

- Minimum: 1 m
- Maximum: 3 m

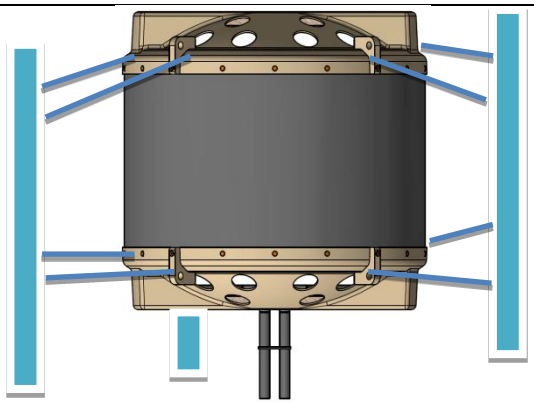	

5.4.3 Recommended installation depths and clearance from the bottom and surface

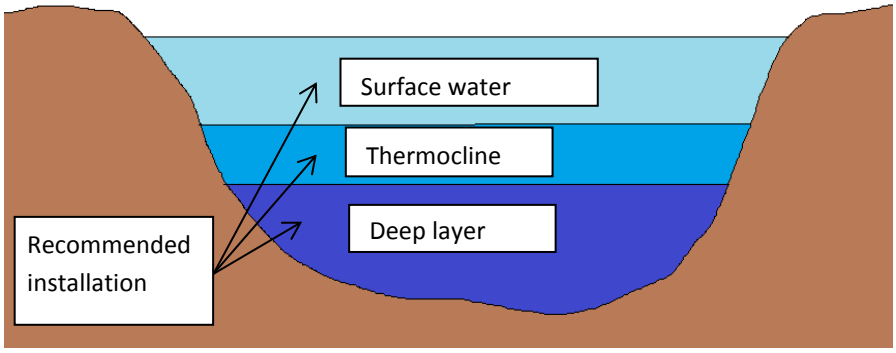	• Water temperature remains above 4°C throughout the year ***(no freezing possible)***. → Heat exchanger **can be installed in all layers**. • Installation depends on the required mean temperature.
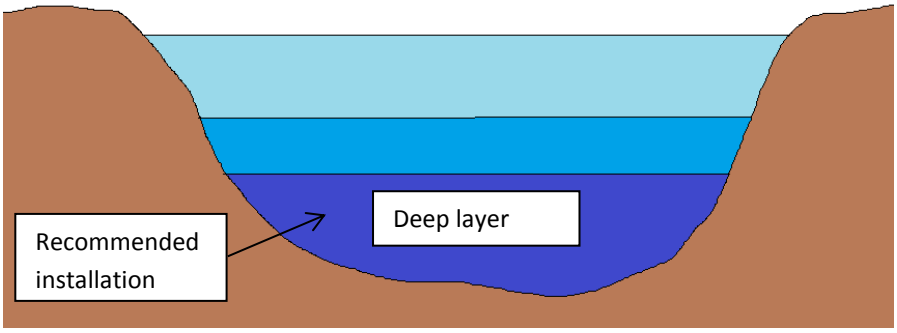	• Water temperature falls below 4°C during the year **(freezing of the water body possible)**. → Installation of the heat exchanger is **recommended only in the deep layer** (constant 4°C during the year).
The following minimum clearances are recommended:	• **1 m** from the water surface • **1 m** from the bottom • **1 m** from the side

5.5 Removal

Removal should be carried out according to the following steps:

- Loosen the connection between the heat exchanger and (a) the weights or (b) the supports.
- Transport the heat exchanger to the water surface.
- Secure using (a) a transportation cable or (b) crane suspension.
- Transport the heat exchanger to land using (a) a transportation cable or (b) crane suspension.
- Disconnect the pipework from the inlet and outlet.
- Empty the heat exchanger.

Note: Removal under water is only to be carried out by specialised personnel **(at least two people with valid diving certificates required!)**.

5.6 Disposal

The heat exchanger must be disposed of in accordance with local regulations.

5.7 Maintenance schedule

Description of maintenance activity	Actions to be carried out	Activity frequency
Check for leaks (in the entire system circuit, including heat pump, pipework, and heat exchanger)	• Check the system operating pressure against the reference range specified by the heat pump manufacturer	Annually
Check for proper functioning	• Check the process parameters for heat transfer through verification and validation testing	Annually
Replace the heat transfer media	• Empty the old media from the circuit • Fill the circuit with new media	For the replacement interval, see the instructions on the manufacturer's data sheet.
Check the marking at the installation site	• Visually inspect the indicated water area for compliance with regard to applicable regulations	Annually

5.8 Troubleshooting

Description of fault	Reason for fault	Actions to be carried out
Insufficient heat transfer	Flow rate too low	Increase flow rate
Insufficient heat transfer	Filled with unapproved heat transfer media	Empty the circuit and refill with approved processing medium
Insufficient heat transfer	Leakage in system circuit (heat pump, pipework, heat	Check for leaks; repair if necessary

	exchanger)	
Insufficient heat transfer	Heat exchanger is not installed at specified depth	Install heat exchanger at specified depth
Insufficient heat transfer	Substantial deposits on the heat exchanger due to insufficient maintenance	Carry out maintenance according to the schedule
Heat transfer above required level	Flow rate too high	Reduce flow rate
Pressure difference above standard state	Deposits in the heat exchanger	Carry out maintenance according to the schedule
Pressure difference above standard state	Heat exchanger leaks	Check for leaks; repair if necessary

6 Operation

Heating application	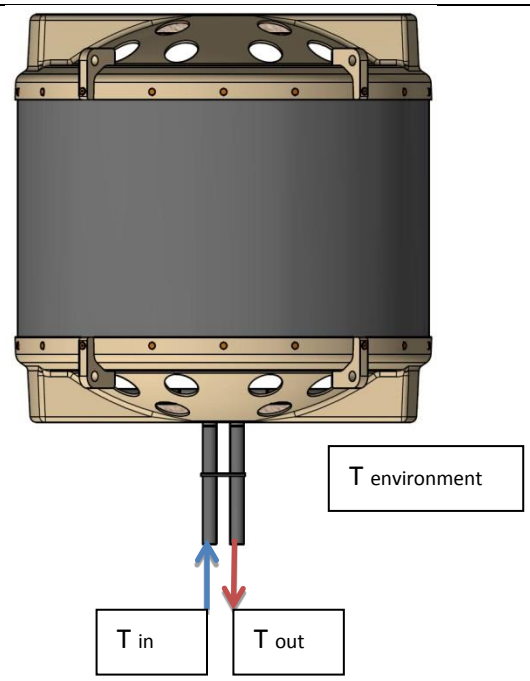 Conditions for heating application: • T in < T out < T environment
Cooling application	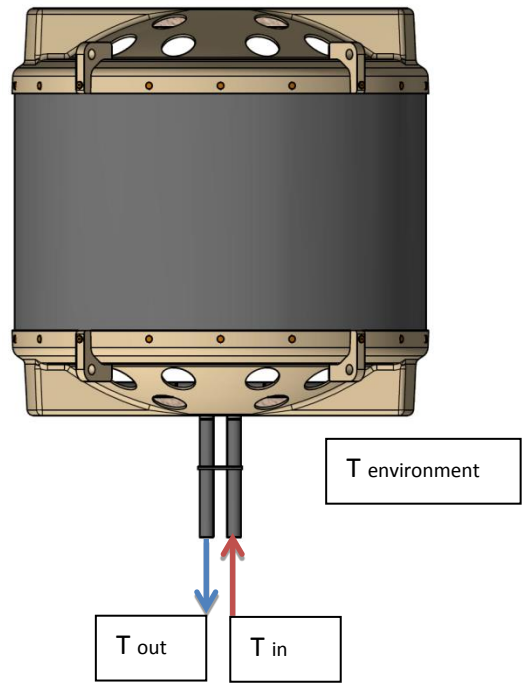 Conditions for cooling application: • T in > T out > T environment

7 Technical documentation

7.1 Technical drawings

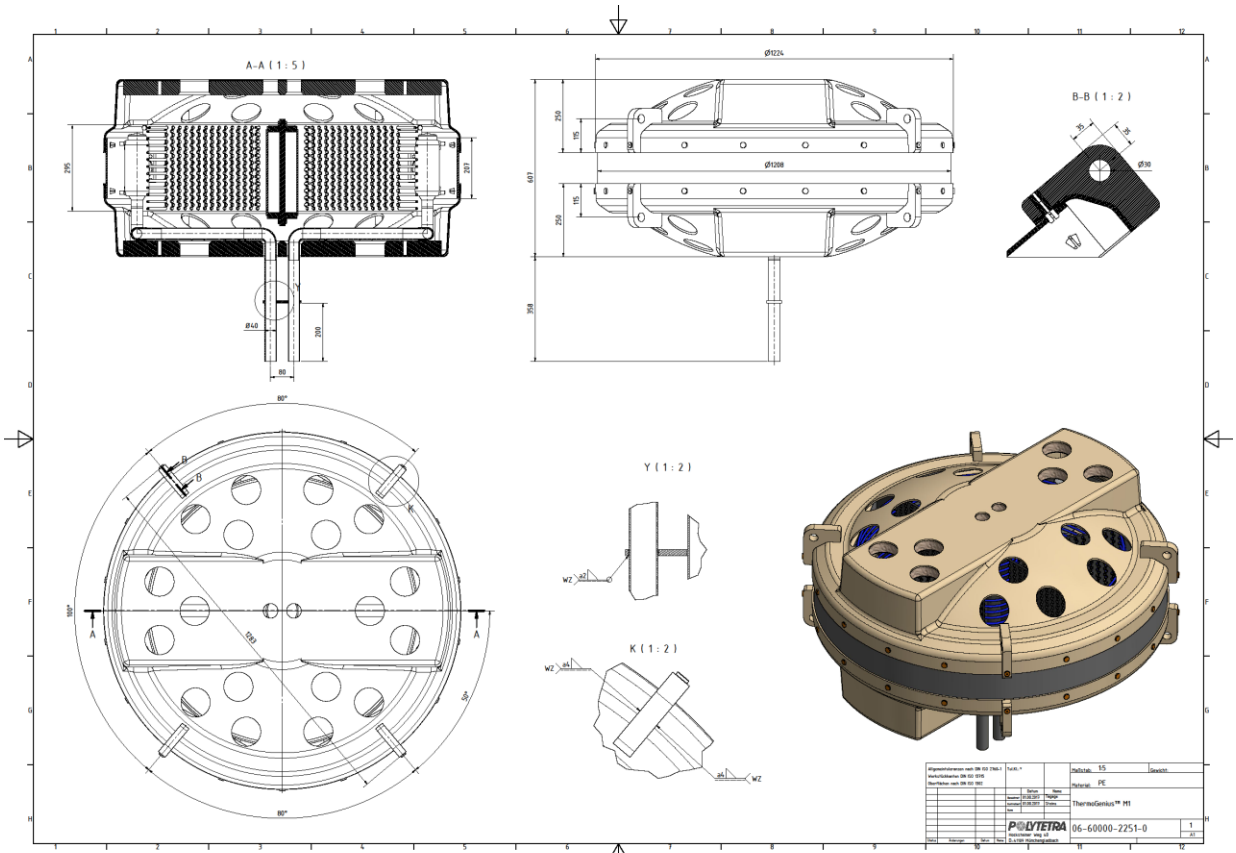
A-A (1 : 5)
B-B (1 : 2)
Y (1 : 2)
K (1 : 2)
Ø1224
Ø1208
Ø40
Ø30
Ø93
295
203
607
250
115
358
200
80
60°
50°
Maßstab: 1:5
Gewicht:
Material: PE
ThermoGenius™ M1
POLYTETRA
06-60000-2251-0
1
A3

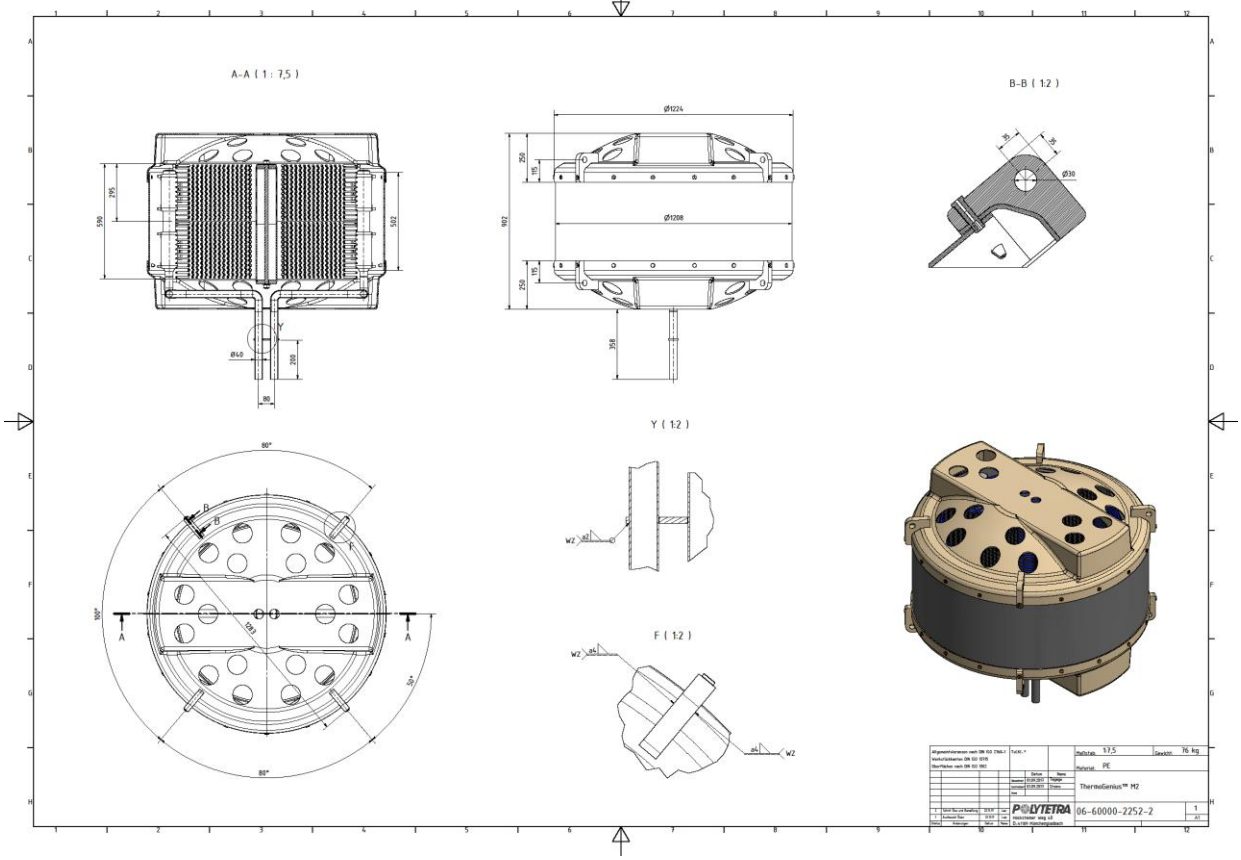
A-A (1 : 7,5)
B-B (1:2)
Y (1:2)
F (1:2)
Ø1224
Ø1208
Ø40
Ø30
Ø93
590
502
295
902
250
115
358
200
80
60°
50°
Maßstab: 1:7,5
Gewicht: 76 kg
Material: PE
ThermoGenius™ M2
POLYTETRA
06-60000-2252-2
1
A3

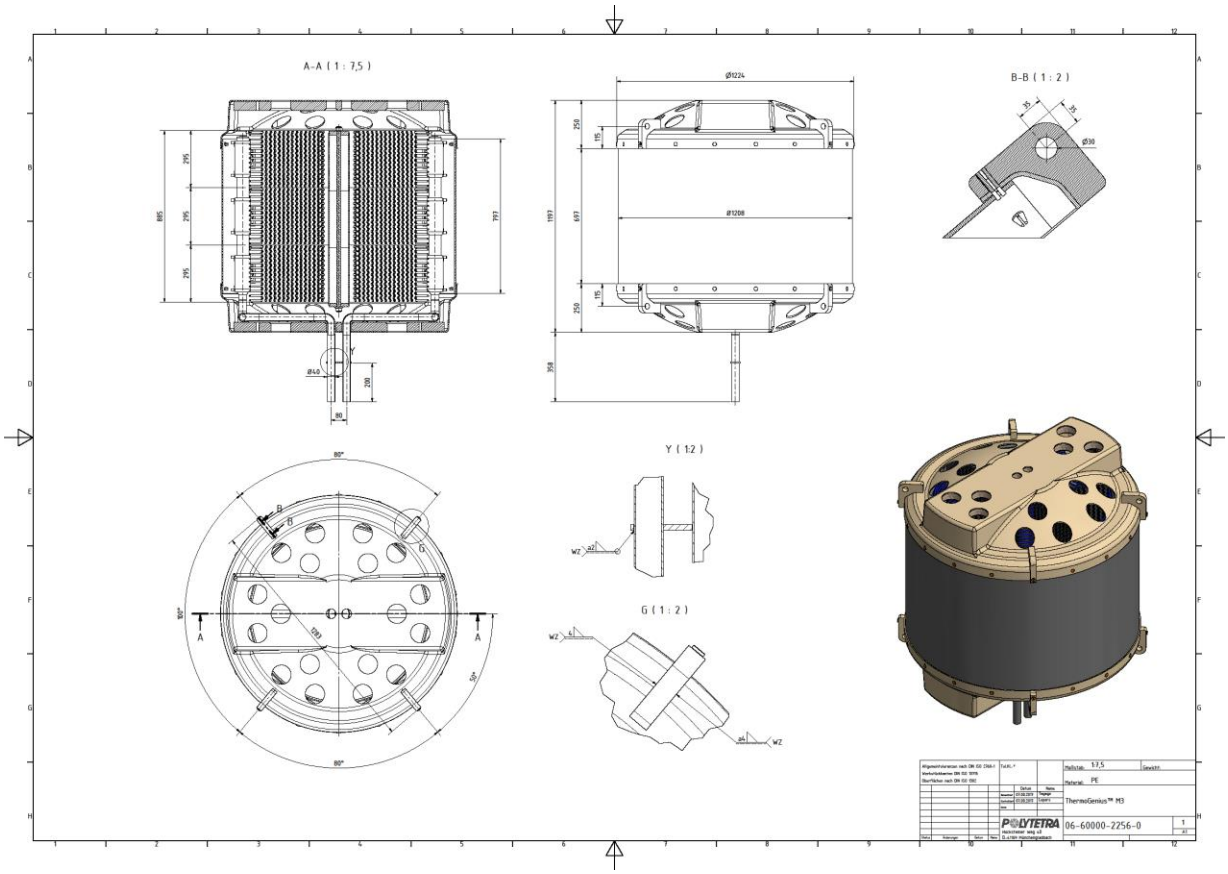
A-A (1 : 7,5)
B-B (1 : 2)
Y (1:2)
G (1 : 2)
Maßstab: 1:7,5
Gewicht:
Material: PE
ThermoGenius™ M3
POLYTETRA
06-60000-2256-0

7.2 Pressure loss diagram

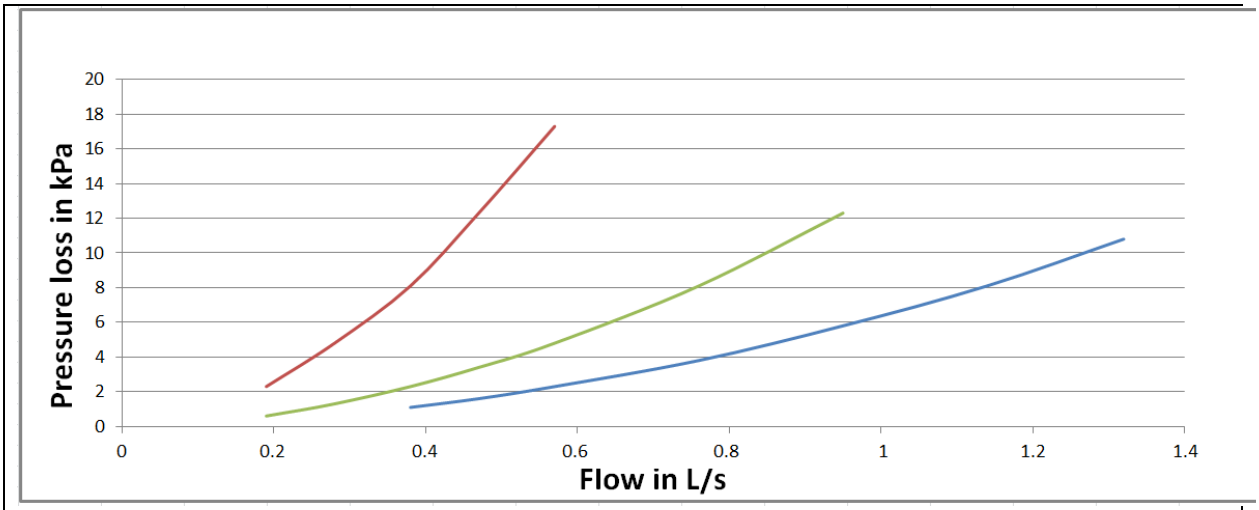

Figure 8: Pressure loss curve with water medium at 0°C

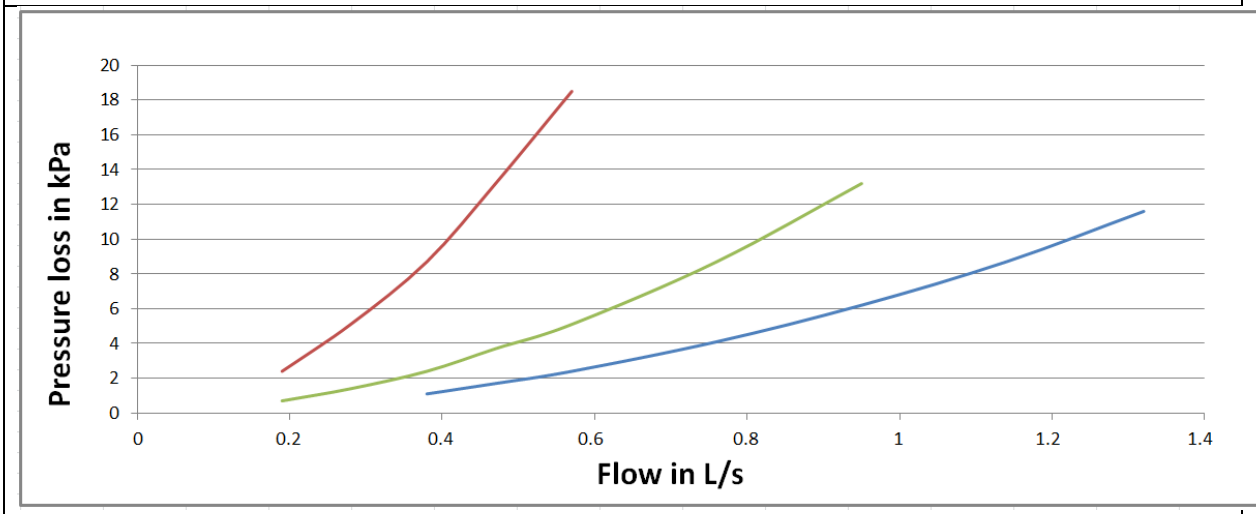

Figure 9: Pressure loss curve with ethanol medium (20%) at 0°C

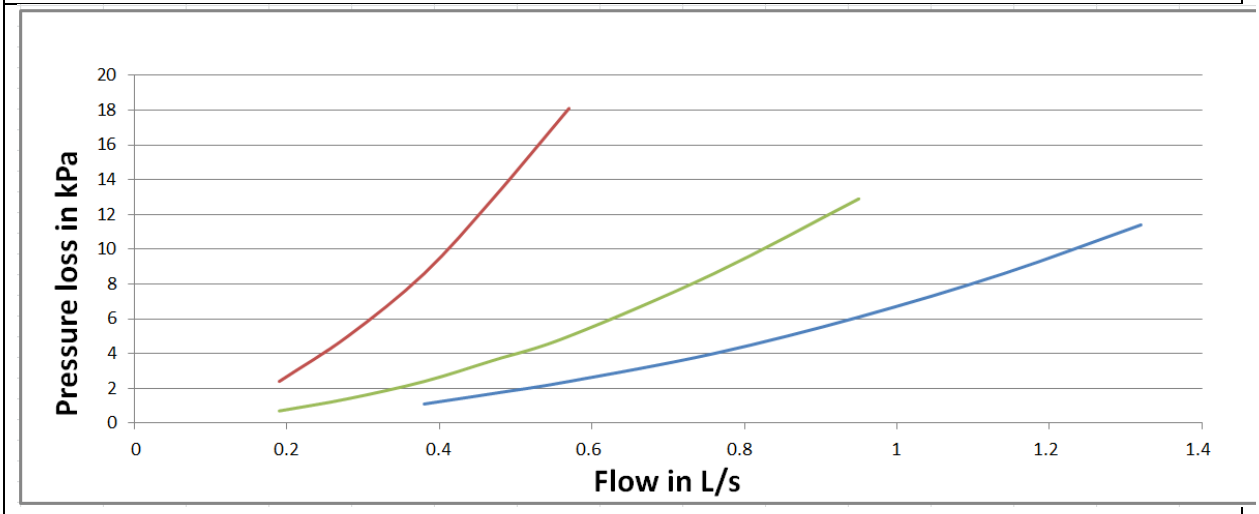

Figure 10: Pressure loss curve with methanol medium (25%) at 0°C

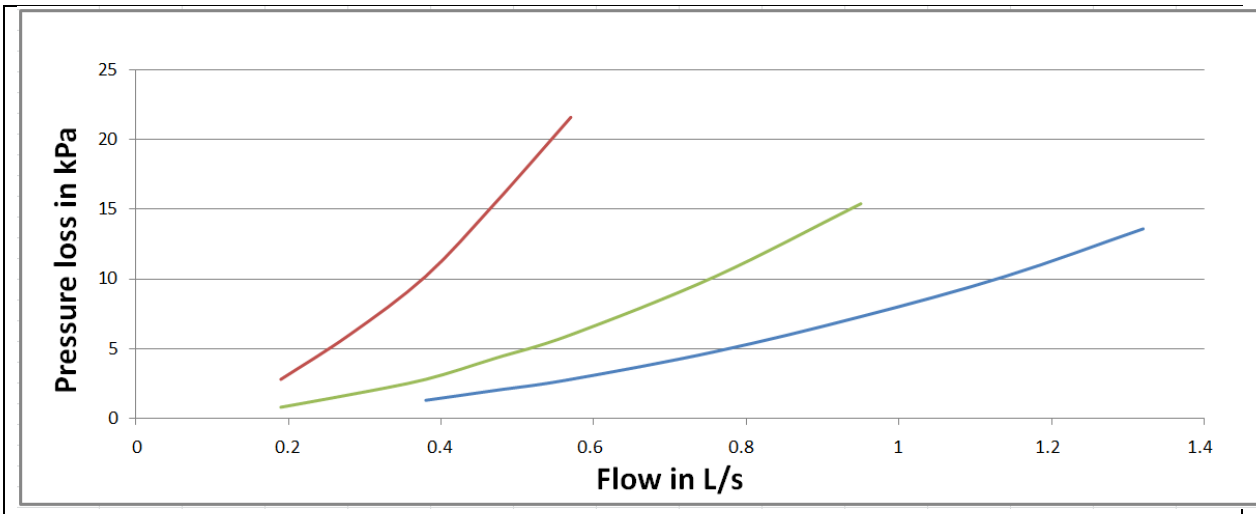

Figure 11: Pressure loss curve with propylene glycol medium at 0°C

7.3 Sample performance curves

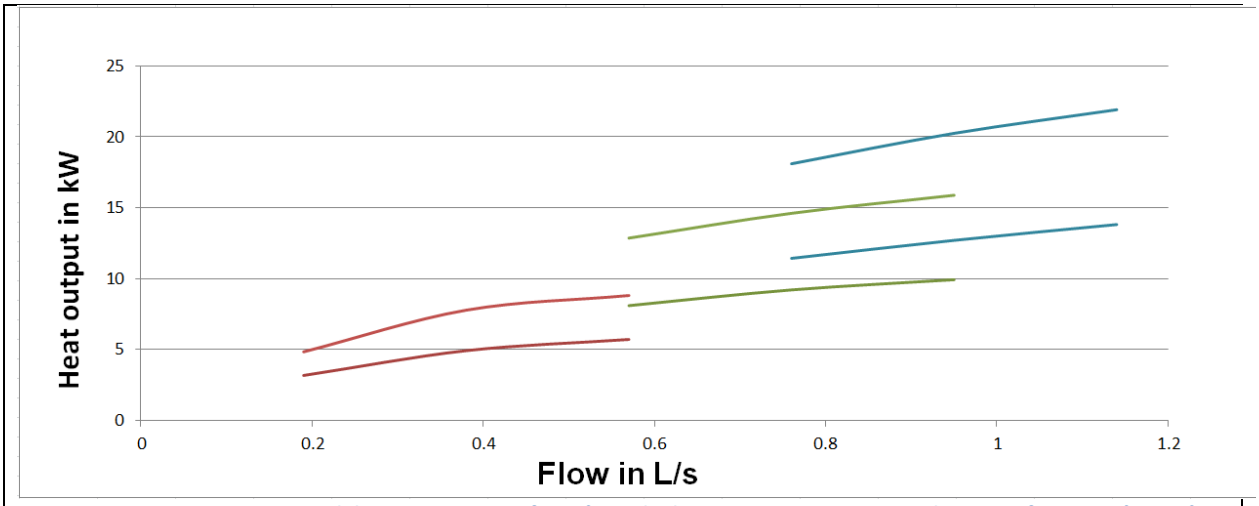

Figure 12: Heating capacity at lake temperature of +4.4°C and inlet water temperature in the range from −2.2°C to 0°C

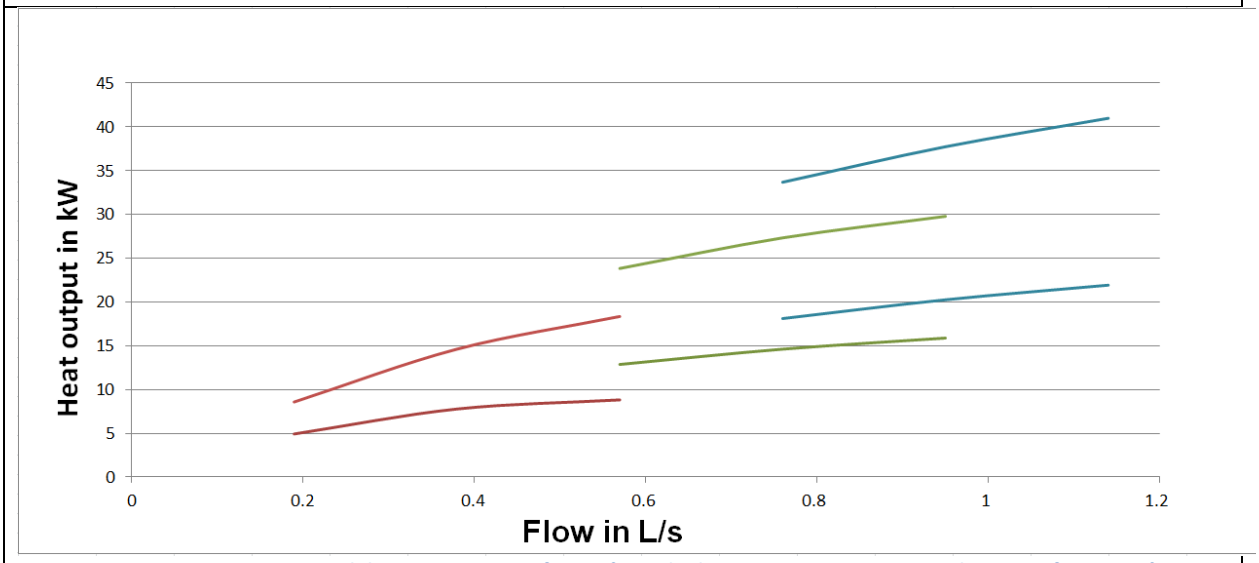

Figure 13: Heating capacity at lake temperature of +15.6°C and inlet water temperature in the range from −4.4°C to +8.9°C

Single Double Triple

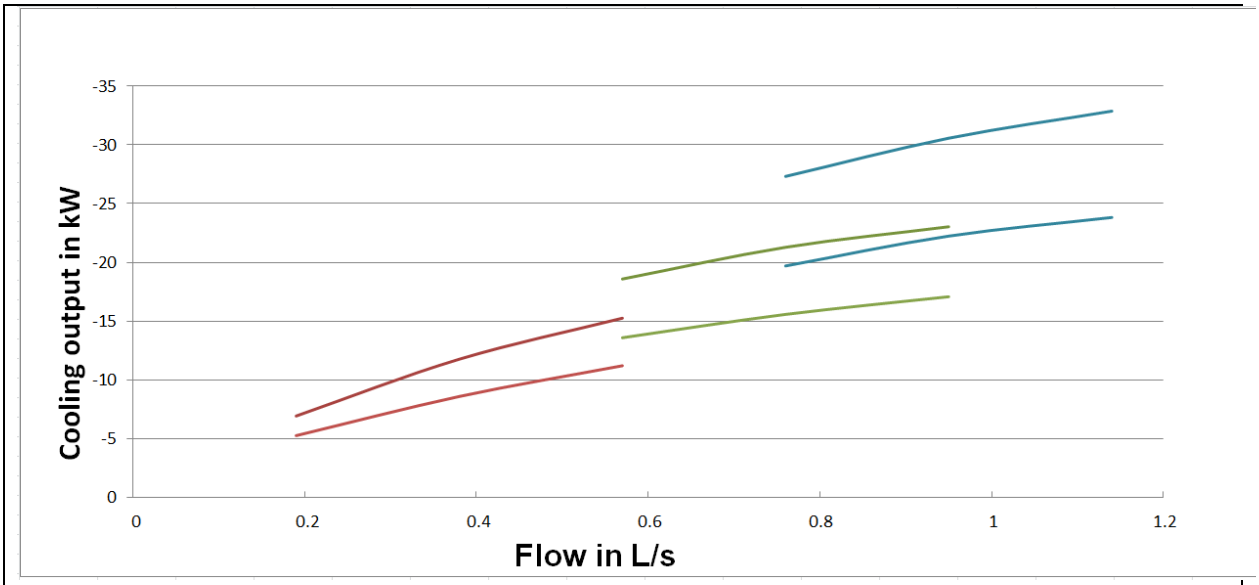

Figure 14: Cooling capacity at lake temperature of 10.0°C and inlet water temperature in the range from 16.7°C to 18.9°C

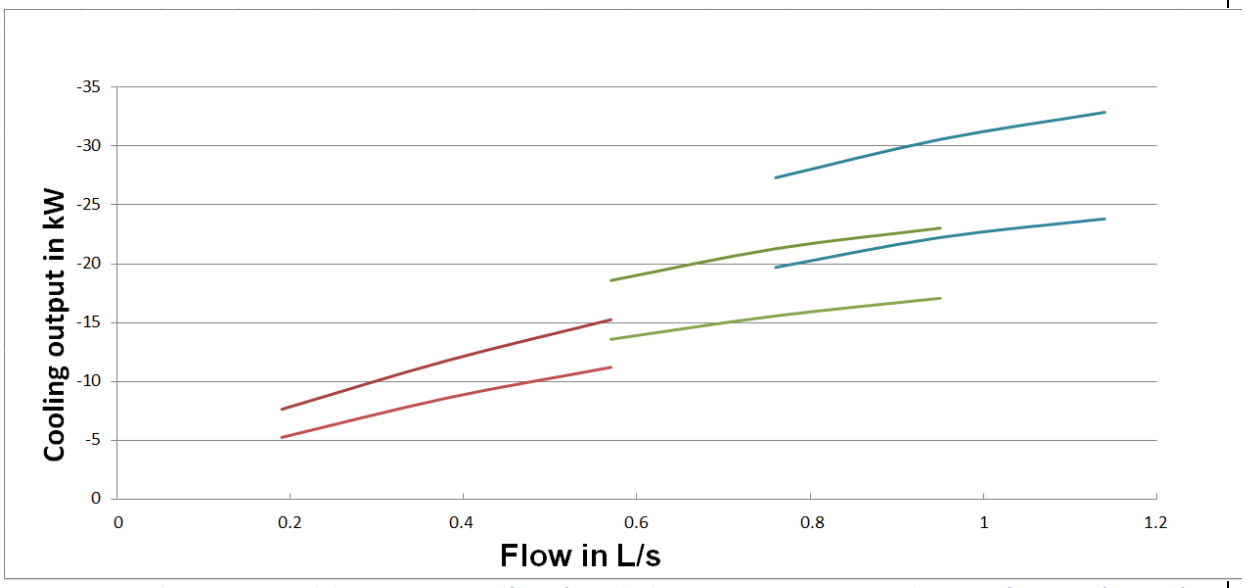

Figure 15: Cooling capacity at lake temperature of 21.1°C and inlet water temperature in the range from 27.8°C to 30°C

Single Double Triple

7.4 Spare parts list

The ThermoGenius™ is supplied as a complete unit. There are no wear parts that need to be replaced at regular intervals during the life cycle of the product. There is therefore no requirement for spare parts.

Technical Sales/Production ThermoGenius™ Water Heat Exchangers

ElringKlinger Kunststofftechnik GmbH | Mönchengladbach plant | Hocksteiner Weg 40 | D-41189 Mönchengladbach
Phone +49 2166 9590-0 | Fax +49 2166 9590-55 | sales.ekt@elringklinger.com | www.elringklinger-kunststoff.de

Headquarters and other plants of ElringKlinger Kunststofftechnik GmbH

ElringKlinger Kunststofftechnik GmbH | Etzelstraße 10 | D-74321 Bietigheim-Bissingen
Phone +49 7142 583-0 | Fax +49 7142 583-200 | sales.ekt@elringklinger.com | www.elringklinger-kunststoff.de

Heidenheim plant | Badenbergstraße 15 | D-89520 Heidenheim
Phone +49 7321 9641-0 | Fax +49 7321 9641-24 | sales.ekt@elringklinger.com | www.elringklinger-kunststoff.de

ElringKlinger Engineered Plastics (Qingdao) Co., Ltd. | No. 101&201 Room, A2 Building 1000 Yuntai Shan Road
International Innovation Park | Sino German Ecopark Huangdao District | 266500 Qingdao V.R. China
Fon +86 532 6872 2830 | Fax +86 532 6872 2838 | info.ektc@elringklinger.com | www.elringklinger-ep.cn

ElringKlinger Engineered Plastics North America, Inc. | 4971 Golden Parkway | Buford, GA 30518 USA
Phone +1 678 730 8190 | Fax +1 770 932 2385 | info.ektu@elringklinger.com | www.elringklinger-ep.com

DQS certified according to ISO/TS 16949 (Reg. no. 002504 TS2/003) | DIN EN ISO 14001 (Reg. no. 002504 UM)

DNV-GL certified according to GMP for Equipment with Food Contact Surfaces (Reg.-Nr. 201043-2016-FSMS-ITA-DNV)

DQS MED certified according to DIN EN ISO 13485:2012

elringklinger
Engineered Plastics